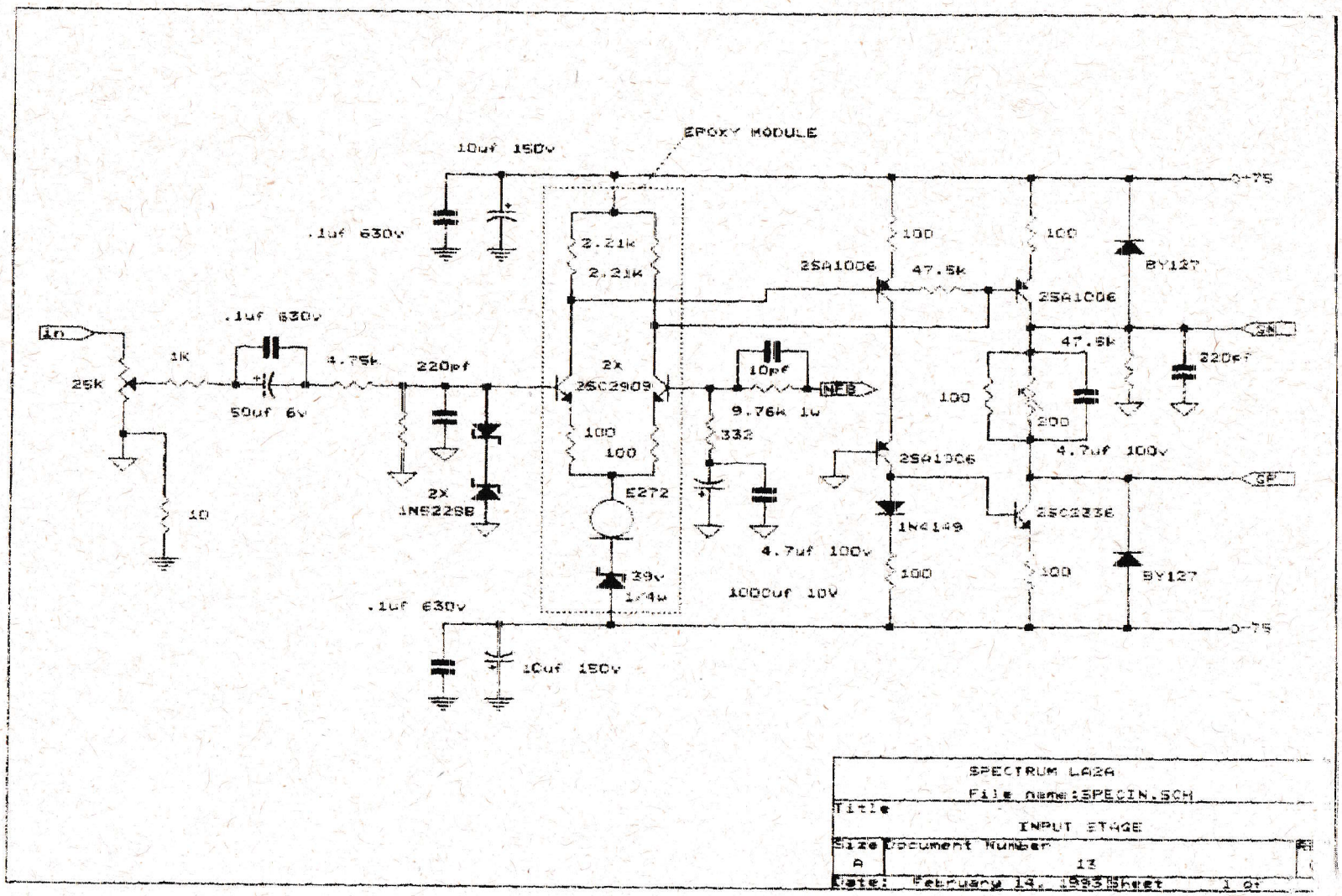
EPOXY MODULE
10uf 150v
.1uf 630v
2.21k
2.21k
2SA1006
47.5k
100
100
BY127
+75
.1uf 630v
In
1K
4.75k
220pf
2x
2SC2909
10pf
9.76k 1w
NFB
100
100
47.5k
220pf
25k
50uf 6v
100
200
4.7uf 100v
332
2SA1006
GN
2x
1N5228B
5272
GP
10
1N4149
2SC2236
4.7uf 100v
39v
1/4w
1000uf 10V
100
100
BY127
.1uf 630v
-75
10uf 150v
SPECTRUM LA2A
File name:SPECIN.SCH
Title
INPUT STAGE
Size
A
Document Number
13
Date: February 19, 1993
Sheet 1 of